Dwyer

SERIES DPGA/DPGW/DPGWB/DPGAB

0.5% AND 1% DIGITAL PRESSURE GAGES

Economic Gage with Selectable Engineering Units, Rubber Boot

DPGA

DPGW

DPGAB

DPGWB

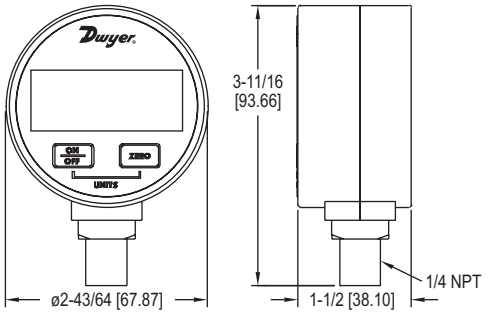

DPGA & DPGW

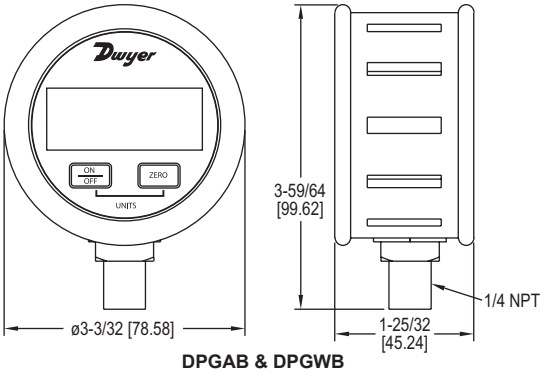

DPGAB & DPGWB

The **Series DPGA 1% Digital Pressure Gage** is the only economic digital pressure gage with selectable engineering units on the market. With its 1% accuracy and digital push-button zero, the DPGA is the perfect choice for digitally monitoring the pressures of air and compatible gases.

The **Series DPGW 1% Digital Pressure Gage** is the only economic digital pressure gage for liquids with the ability to select engineering units on the market. With its 1% accuracy and digital push-button zero, the DPGW is the perfect choice for digitally monitoring the pressures of air and compatible liquids and gases.

The **Series DPGWB/DPGAB 0.5% Digital Pressure Gage** offers full-scale accuracy in a rugged, easy-to-use unit at prices comparable to mechanical gages. The DPGWB stainless steel wetted material makes it suitable for a wide variety of liquids or gases. The gages feature user-selectable units of measure allowing one gage to be used for a variety of pressure scales. The DPGWB/DPGAB come with a protective rubber boot to protect against short drops and rough handling.

FEATURES/BENEFITS

- Push-button zero reduce installation and service time
- High accuracy provides exceptional measurement for minimizing costly out of specification conditions
- Selectable unit button provides reading in easily recognizable units
- Well-suited gage for compatible gas (DPGA) or liquid (DPGW) applications specifying simple operation and accuracy

APPLICATIONS

- Process applications
- Process start-up
- OEM applications

SPECIFICATIONS

Service: DPGA & DPGAB: Air and compatible gases; DPGW & DPGWB: Liquids and compatible gases.
Wetted Materials: DPGA & DPGAB: 316L SS, silicone sensor; DPGW & DPGWB: 316L SS.
Housing Materials: ABS plastic.
Accuracy: DPGA & DPGW: ±1.0% FS (includes linearity, hysteresis, repeatability); DPGAB & DPGWB: ±0.5% FS (includes linearity, hysteresis, repeatability).
Pressure Limits: 2X pressure range. Vacuum range max. pressure is 30 psig.
Temperature Limits: 30 to 120°F (-1 to 49°C).
Thermal Effect: 0.05% FS/°F.
Size: 2.62″ OD x 1.52″ deep.
Process Connections: 1/4″ male NPT.
Display: 4-digit LCD (.425″ H x .234″ W digits).
Power Requirements: 9 V alkaline battery, included, user replaceable.
Auto Shut-off: 20 minute auto shut-off.
Weight: 5.6 oz (160 g).

ACCESSORIES

Model	Description
A-293	Protective rubber boot

OPTIONS

To order add suffix:	Description
-NIST	NIST traceable calibration certificate
Example: DPGA-04-NIST, DPGAB-04-NIST	

MODEL CHART

Model	Model	Range	Pressure Ranges psig	kg/cm²	bar	in Hg	ft w.c.	kPa	oz/in²	in w.c.	mbar	cm w.c.	mm Hg	Resolution psi
DPGA-00	DPGW-00	30″ Hg to 0 (psi)	-14.70	-1.033	-1.013	-29.93	-33.94	-101.4	-235.2	-407.3	-1013	-1034	-761	0.01
DPGA-04	DPGW-04	0 to 5 psi	5.000	.3515	.3447	10.18	11.53	34.47	80.0	138.4	344.7	351.5	258.6	0.002
DPGA-05	DPGW-05	0 to 15 psi	15.00	1.055	1.034	30.54	34.60	103.4	240.0	415.2	1034	1055	776	0.01
DPGA-06	DPGW-06	0 to 30 psi	30.00	2.109	2.068	61.1	69.2	206.8	480.0	830	2068	2109	1551	0.01
DPGA-07	DPGW-07	0 to 50 psi	50.00	3.515	3.447	101.8	115.3	344.7	800	1384	3447	3515	2586	0.02
DPGA-08	DPGW-08	0 to 100 psi	100.0	7.03	6.89	203.6	230.7	689	1600	2768	-	-	-	0.1
DPGA-09	DPGW-09	0 to 200 psi	200.0	14.06	13.79	407.2	461.3	1379	3200	-	-	-	-	0.1
DPGA-10	DPGW-10	0 to 300 psi	300.0	21.09	20.68	611	692	2068	4800	-	-	-	-	0.1
DPGA-11	DPGW-11	0 to 500 psi	500.0	35.15	34.47	1018	1153	3447	-	-	-	-	-	0.2

Compound range available: DPGW-12: 30″ Hg-0-100 psi.

MODEL CHART

Model	Model	Range	Pressure Ranges psig	kg/cm²	bar	in Hg	ft w.c.	kPa	oz/in²	in w.c.	mbar	cm w.c.	mm Hg	Resolution psi
DPGAB-00	DPGWB-00	30″ Hg to 0 (psi)	-14.70	-1.033	-1.013	-29.93	-33.94	-101.4	-235.2	-407.3	-1013	-1034	-761	0.01
DPGAB-04	DPGWB-04	0 to 5 psi	5.000	.3515	.3447	10.18	11.53	34.47	80.0	138.4	344.7	351.5	258.6	0.002
DPGAB-05	DPGWB-05	0 to 15 psi	15.00	1.055	1.034	30.54	34.60	103.4	240.0	415.2	1034	1055	776	0.01
DPGAB-06	DPGWB-06	0 to 30 psi	30.00	2.109	2.068	61.1	69.2	206.8	480.0	830	2068	2109	1551	0.01
DPGAB-07	DPGWB-07	0 to 50 psi	50.00	3.515	3.447	101.8	115.3	344.7	800	1384	3447	3515	2586	0.02
DPGAB-08	DPGWB-08	0 to 100 psi	100.0	7.03	6.89	203.6	230.7	689	1600	2768	-	-	-	0.1
DPGAB-09	DPGWB-09	0 to 200 psi	200.0	14.06	13.79	407.2	461.3	1379	3200	-	-	-	-	0.1
DPGAB-10	DPGWB-10	0 to 300 psi	300.0	21.09	20.68	611	692	2068	4800	-	-	-	-	0.1
DPGAB-11	DPGWB-11	0 to 500 psi	500.0	35.15	34.47	1018	1153	3447	-	-	-	-	-	0.2

Compound range available: DPGWB-12: 30″ Hg-0-100 psi